MITSUBISHI ELECTRIC

Changes for the Better

THREE PHASE INDUCTION MOTOR

SUPER LINE P SERIES

PREMIUM EFFICIENCY MOTOR
P-SERIES FOR THAILAND

FAST DELIVERY

MULTI-VOLTAGE

VARIOUS MODELS

NEW IP55 MODEL

Efficiency class label

MITSUBISHI ELECTRIC AUTOMATION (THAILAND) CO., LTD.

What's New

Hidden profit from energy saving

The investment cost of motor doesn't refer to only price,but including the variable electricity fees. Three phase P-series can be helped to reach a break even point sooner by advance energy saving performance, to consume less electricity fees.

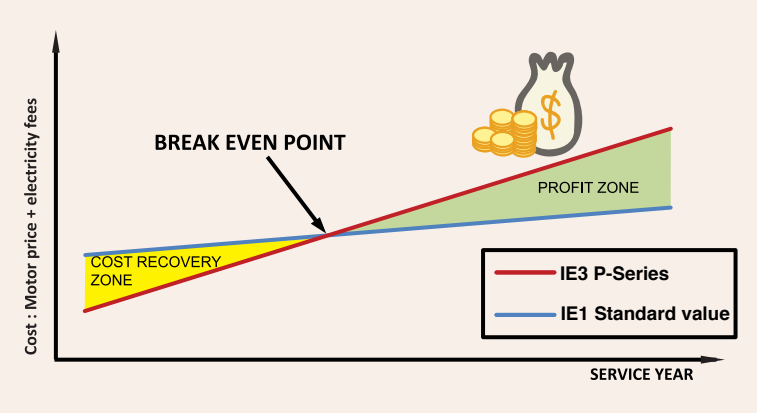

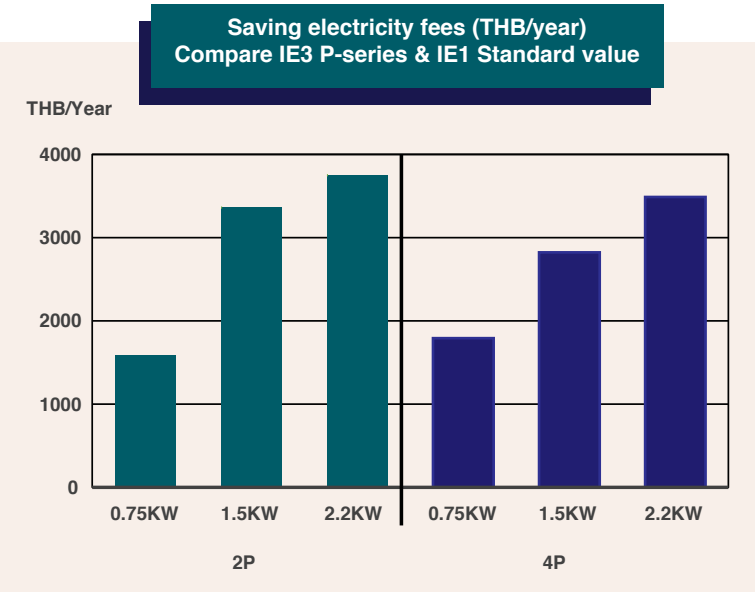

Electricity fees

CALCULATED CONDITION
Rate : 380V 50Hz
Load : 100%
Q'ty : 1 Set
Run time : 8 Hr. / Day, 30 Days / Month
Electricity fees :
- 0 - 150 units = 3.25 THB/unit
- 150 - 400 units = 4.22 THB/unit
- > 400 units = 4.42 THB/unit

* Electricity fees refer Electricity authority announcement electricity rate modification effective since Nov. 2018 (Type1 : Residential Service)

Significance of type designations

S F - P R V O

- Classification
  - Blank = Indoor (IP44)
  - **O = Outdoor dust & water jet proof Motor (IP55)**
- Mounting configuration
  - Blank = Foot mounting
  - V = Vertical flange type
- Frame Material
  - R = Steel Frame
- Enclosure
  - F = Totally enclosed fan-cooled
- Super Line P Series
  - P = Premium

SF-PRO (Foot mounting, Outdoor dust & water jet proof motor)

Only shown on P-series for Thailand SF-PRO, SF-PRVO models

SF-PRVO (Vertical flange type, Outdoor dust & water jet proof motor)

Characteristics and performance

200V 50/60Hz

Number of Poles [P]	Output [kW]	Frame Number	Hz	Voltage	Load Characteristics									Rated Current [A]	Rated Rotation Speed [min^{-1}]	Rated Torque (N.m)	Maximum Torque [%]	Starting Torque [%]	Starting Current [A]
					50% load			75% load			100% load								
					Current [A]	Efficiency [%]	Power Factor [%]	Current [A]	Efficiency [%]	Power Factor [%]	Current [A]	Energy Consumption Efficiency [%]	Power Factor [%]						
2 Poles	0.75	80M	50	200	2.12	80.8	63.3	2.57	82.9	76.3	3.12	82.8	83.8	3.2	2855	2.5	348	378	23.7
			60	200	1.89	81.4	70.5	2.39	83.3	81.6	2.99	82.9	87.3	3.1	3430	2.1	327	312	20.8
	1.5	90L	50	200	3.76	89.3	64.5	4.70	90.0	76.8	5.80	89.4	83.5	6.0	2910	4.9	343	367	54.3
			60	200	3.31	89.6	73.0	4.36	90.0	82.8	5.54	89.3	87.4	5.6	3495	4.1	305	286	46.7
	2.2		50	200	5.13	90.4	68.5	6.58	90.5	79.9	8.28	89.5	85.7	8.4	2895	7.3	316	379	78.0
			60	200	4.57	90.7	76.5	6.16	90.6	85.3	7.95	89.6	89.2	8.2	3480	6.0	280	291	65.0
4 Poles	0.75	80M	50	200	2.66	82.2	49.4	3.04	84.0	63.5	3.55	83.8	72.8	3.6	1420	5.0	303	390	24.6
			60	200	2.15	86.2	58.3	2.62	86.9	71.4	3.19	86.0	78.8	3.3	1710	4.2	274	315	21.4
	1.5	90L	50	200	4.39	86.0	57.3	5.29	87.3	70.3	6.44	86.9	77.4	6.6	1450	9.9	242	281	49.3
			60	200	3.57	89.7	67.5	4.64	89.8	78.0	5.92	88.6	82.5	6.0	1745	8.2	214	217	38.3
	2.2	100L	50	200	6.46	86.8	56.6	7.79	88.3	69.3	9.42	88.2	76.5	9.6	1450	14.5	247	323	76.0
			60	200	5.18	90.4	67.8	6.75	90.8	77.7	8.57	89.9	82.4	8.8	1745	12.0	219	251	62.0

380/400/415V 50Hz, 400V 60Hz

Number of Poles [P]	Output [kW]	Frame Number	Hz	Voltage	Load Characteristics									Rated Current [A]	Rated Rotation Speed [min^{-1}]	Rated Torque (N.m)	Maximum Torque [%]	Starting Torque [%]	Starting Current [A]
					50% load			75% load			100% load								
					Current [A]	Efficiency [%]	Power Factor [%]	Current [A]	Efficiency [%]	Power Factor [%]	Current [A]	Energy Consumption Efficiency [%]	Power Factor [%]						
2 Poles	0.75	80M	50	380	1.04	81.3	67.5	1.30	82.8	79.7	1.61	82.0	86.3	1.65	2835	2.5	316	339	11.2
				400	1.06	80.8	63.3	1.29	82.9	76.3	1.56	82.8	83.8	1.6	2855	2.5	348	378	11.9
				415	1.09	80.2	59.9	1.29	82.8	73.3	1.54	83.0	81.5	1.6	2870	2.5	374	411	12.3
			60	400	0.945	81.4	70.5	1.20	83.3	81.6	1.50	82.9	87.3	1.55	3430	2.1	327	312	10.4
	1.5	90L	50	380	1.85	89.5	69.0	2.38	89.7	80.2	2.99	88.8	85.9	3.1	2900	4.9	310	330	25.6
				400	1.88	89.3	64.5	2.35	90.0	76.8	2.90	89.4	83.5	3.0	2910	4.9	343	367	27.2
				415	1.93	88.9	60.7	2.36	89.9	73.7	2.87	89.6	81.1	2.9	2920	4.9	369	398	28.4
			60	400	1.66	89.6	73.0	2.18	90.0	82.8	2.77	89.3	87.4	2.8	3495	4.1	305	286	23.4
	2.2		50	380	2.54	90.5	72.8	3.35	90.1	83.0	4.29	88.8	87.8	4.4	2880	7.3	286	340	36.7
				400	2.57	90.4	68.5	3.29	90.5	79.9	4.14	89.5	85.7	4.2	2895	7.3	316	379	39.0
				415	2.62	90.1	64.7	3.29	90.5	77.1	4.07	89.8	83.7	4.2	2905	7.2	341	411	40.9
			60	400	2.29	90.7	76.5	3.08	90.6	85.3	3.98	89.6	89.2	4.1	3480	6.0	280	291	32.5
4 Poles	0.75	80M	50	380	1.26	83.6	54.3	1.49	84.5	68.1	1.78	83.5	76.8	1.8	1410	5.1	275	349	11.6
				400	1.33	82.2	49.4	1.52	84.0	63.5	1.78	83.8	72.8	1.8	1420	5.0	303	390	12.3
				415	1.41	80.5	45.8	1.58	83.2	59.5	1.80	83.5	69.3	1.9	1430	5.0	325	423	12.9
			60	400	1.08	86.2	58.3	1.31	86.9	71.4	1.60	86.0	78.8	1.65	1710	4.2	274	315	10.7
	1.5	90L	50	380	2.08	87.6	62.7	2.62	87.9	74.4	3.29	86.7	80.1	3.4	1445	9.9	220	253	23.0
				400	2.20	86.0	57.3	2.65	87.3	70.3	3.22	86.9	77.4	3.3	1450	9.9	242	281	24.7
				415	2.33	84.4	53.1	2.75	86.3	65.9	3.25	86.6	74.1	3.3	1455	9.8	259	304	26.0
			60	400	1.79	89.7	67.5	2.32	89.8	78.0	2.96	88.6	82.5	3.0	1745	8.2	214	217	19.2
	2.2	100L	50	380	3.04	88.4	62.2	3.82	88.9	73.9	4.75	88.1	79.9	4.8	1445	14.5	226	291	35.5
				400	3.23	86.8	56.6	3.89	88.3	69.3	4.71	88.2	76.5	4.8	1450	14.5	247	323	38.0
				415	3.48	84.8	51.9	4.05	87.1	64.9	4.78	87.5	73.1	4.9	1455	14.4	265	351	40.1
			60	400	2.59	90.4	67.8	3.38	90.8	77.7	4.29	89.9	82.4	4.4	1745	12.0	219	251	31.0
	3.7	112M	50	380	4.77	89.9	65.7	6.10	89.8	77.3	7.65	88.6	83.1	7.8	1445	24.4	261	330	61.0
				400	4.91	89.5	60.9	6.05	90.0	73.6	7.50	89.2	80.4	7.7	1450	24.4	288	366	65.0
				415	5.10	88.9	56.8	6.15	89.8	70.2	7.40	89.4	77.9	7.5	1455	24.3	309	397	68.5
			60	400	4.20	90.9	70.0	5.55	90.8	80.0	7.05	89.8	84.7	7.2	1745	20.2	255	278	55.0
	5.5	132S	50	380	7.30	91.1	62.6	9.10	91.7	75.1	11.20	91.2	81.7	11.3	1460	36.0	284	255	89.0
				400	7.70	90.4	57.0	9.25	91.4	70.4	11.15	91.2	78.2	22.6	1465	35.8	312	295	94.5
				415	8.20	89.1	52.1	9.55	90.7	66.0	11.30	90.9	74.7	11.5	1465	35.8	334	319	98.5
			60	400	6.35	92.3	68.2	8.15	92.6	79.0	10.25	92.1	84.2	10.4	1760	29.8	276	227	77.5
	7.5	132M	50	380	9.20	92.0	67.5	11.80	91.8	78.9	14.90	90.9	84.3	15.1	1460	49.0	267	234	110.0
				400	9.55	91.3	62.2	11.85	91.7	74.8	14.55	91.2	81.6	14.8	1460	49.0	294	260	116.5
				415	10.10	90.5	57.2	12.10	91.4	70.7	14.60	91.2	78.5	14.8	1465	48.9	316	282	122.0
			60	400	8.00	92.9	72.7	10.65	92.8	82.2	13.70	91.8	86.3	14.0	1755	40.8	260	200	96.0

- Characteristic calculation method is based on dynamometer method (actual measurement method).
- Characteristic values indicate representative values, not guaranteed values.

SF-PR 0.75kW - 7.5kW (HORIZONTAL TYPE)

TOTALLY ENCLOSED FAN-COOLED TYPE,IP44 DEGREES OF PROTECTION (Indoor Motor)

SF-PR Indoor Motor

Figure - 1

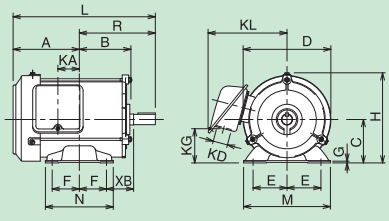

Figure - 2

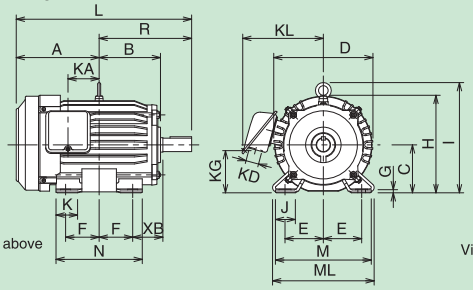

Shaft End Dimensions

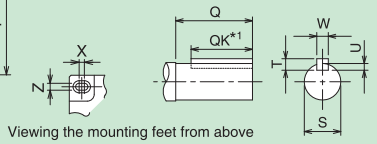

Outline dimensions

Frame Number	Thermal Class	Output(kW) Poles 2	Output(kW) Poles 4	Figure Number	Dimension(mm) Motors A	B	C*2	D	E	F	G	H	I	J	K	KA	KD	KG	KL
80M	120 (E)	0.75	0.75	1	122	93	80	162	62.5	50	3.2	166	-	-	-	39.5	27	63	145
90L		1.5,2.2	1.5		143	111.5	90	184	70	62.5	4	191	-	-	-	53	27	76	158
100L		-	2.2	2	173	128	100	207	80	70	6.5	203.5	230	40	45	65	27	88	169
112M		-	3.7		181	135	112	228	95	70	6.5	226	253	40	45	69	27	103	180
132S	130 (B)	-	5.5		211.5	152	132	266	108	70	6.5	265	288	40	45	75	27	120	197
132M		-	7.5		230.5	171	132	266	108	89	6.5	265	288	40	45	94	27	120	197

Frame Number	Dimension(mm) Motors L	M	ML	N	X	XB	Z	Q	QK	R	S	T	U	W	Bearing Number Load Side	Anti-Load Side	Approximate Unloaded Mass(kg) 2 Poles	4 Poles
80M	262	160	-	125	15	50	9	40	32	140	19j6	6	3.5	6	6204ZZ	6204ZZ	12	13
90L	311.5	175	-	150	15	56	9	50	40	168.5	24j6	7	4	8	6205ZZ	6205ZZ	19 , 21	20
100L	366	200	212	180	4	63	12	60	45	193	28j6	7	4	8	6206ZZ	6205ZZ	-	29
112M	381	230	242	180	4	70	12	60	45	200	28j6	7	4	8	6207ZZ	6206ZZ	-	37
132S	450.5	256	268	180	4	89	12	80	63	239	38k6	8	5	10	6308ZZ	6207ZZ	-	54
132M	488.5	256	268	218	4	89	12	80	63	258	38k6	8	5	10	6308ZZ	6207ZZ	-	65

SF-PRO 0.75kW - 2.2kW (HORIZONTAL TYPE)

TOTALLY ENCLOSED FAN-COOLED TYPE, **IP55 DEGREES OF PROTECTION** (Outdoor Dust & Water jet proof Motor)

SF-PRO Outdoor Dust & Water jet proof Motor

Figure - 3

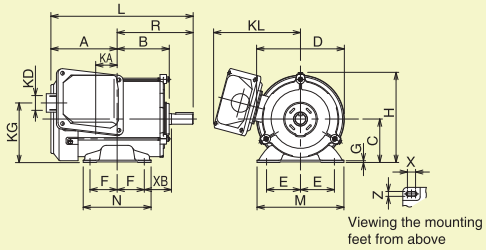

Figure - 4

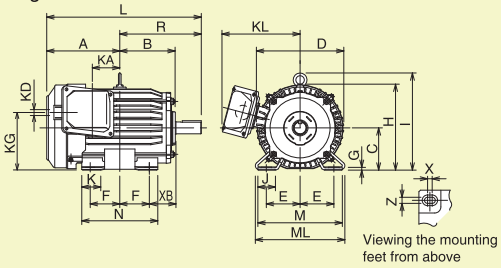

Shaft End Dimensions

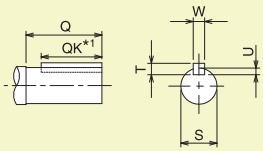

Outline dimensions

Frame Number	Thermal Class	Output(kW) Poles 2	Output(kW) Poles 4	Figure Number	Dimension(mm) Motors A	B	C*2	D	E	F	G	H	I	J	K	KA	KD	KG	KL
80M	120 (E)	0.75	0.75	3	122	96	80	162	62.5	50	3.2	166	-	-	-	39.5	27	63	145
90L		1.5,2.2	1.5		143	114.5	90	184	70	62.5	4	191	-	-	-	53	27	76	158
100L		-	2.2	4	173	131	100	207	80	70	6.5	203.5	230	40	45	65	27	88	169

Frame Number	Dimension(mm) Motors L	M	ML	N	X	XB	Z	Q	QK	R	S	T	U	W	Bearing Number Load Side	Anti-Load Side	Approximate Unloaded Mass(kg) 2 Poles	4 Poles
80M	262	160	-	125	15	50	9	40	32	140	19j6	6	3.5	6	6204ZZ	6204ZZ	12	13
90L	311.5	175	-	150	15	56	9	50	40	168.5	24j6	7	4	8	6205ZZ	6205ZZ	19 , 21	20
100L	366	200	212	180	4	63	12	60	45	193	28j6	7	4	8	6206ZZ	6205ZZ	-	29

*1 Since the key groove is machined with end mill, there is no roundness at the groove bottom.

*2 The vertical tolerance for the shaft center is $^{0}_{-0.5}$

- Since outline drawings are shown by representative models, some appearances may slightly differ depending on the frame number.
- Make sure to inquire when requiring exact external dimensions, since the external dimensions may be partially modified due to the refinement process, etc.

Remark: For feature and construction can reference from catalog standard.

SF-PRV 0.75kW - 7.5kW (VERTICAL FLANGE TYPE)

TOTALLY ENCLOSED FAN-COOLED TYPE,IP44 DEGREES OF PROTECTION (Indoor Motor)

SF-PRV Vertical Flange Indoor Motor

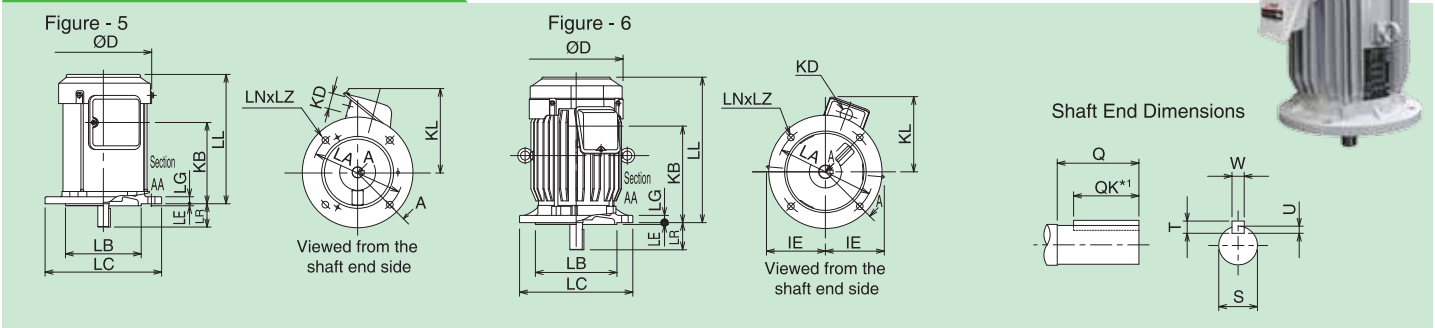

Outline dimensions

Flange Number	Frame Number	Thermal Class	Output (kW) Poles 2	Output (kW) Poles 4	Figure Number	Dimensions (mm) Motors D	IE	KB	KD	KL	LA	LB	LC	LE	LG	LL	LN	LZ
FF165	80M	120 (E)	0.75	0.75	5	166	-	139.5	27	145	165	130j6	200	3.5	12	222	4	12
FF165	90L		1.5 , 2.2	1.5		202	-	198.5	27	158	165	130j6	200	3.5	12	288.5	4	12
FF215	100L		-	2.2	6	207	130	213	27	166	215	180j6	250	4	16	321	4	14.5
FF165	112M		-	3.7		228	141	239	27	177	215	180j6	250	4	16	351	4	14.5
FF165	132S	130 (B)	-	5.5		266	156	256	27	194	265	230j6	300	4	20	392.5	4	14.5
FF215	132M		-	7.5		266	156	294	27	194	265	230j6	350	4	20	430.5	4	14.5

Flange Number	Frame Number	Dimensions (mm) Shaft End LR	Q	QK	S	T	U	W	Bearing Number Load Side	Anti-Load Side	Approximate Unloaded Mass (kg) 2 Poles	4 Poles
FF165	80M	40	40	32	19j6	6	3.5	6	6204ZZ	6204ZZ	15	16
FF165	90L	50	50	40	24j6	7	4	8	6205ZZ	6205ZZ	22 , 24	23
FF215	100L	60	60	45	28j6	7	4	8	6206ZZ	6205ZZ	-	33
FF165	112M	60	60	45	28j6	7	4	8	6207ZZ	6206ZZ	-	43
FF165	132S	80	80	63	38k6	8	5	10	6308ZZ	6207ZZ	-	61
FF215	132M	80	80	63	38k6	8	5	10	6308ZZ	6207ZZ	-	70

Remark: For feature and construction can reference from catalog standard.

SF-PRVO 0.75kW - 2.2kW (VERTICAL FLANGE TYPE)

TOTALLY ENCLOSED FAN-COOLED TYPE,**IP55 DEGREES OF PROTECTION** (Outdoor Dust & Water jet proof Motor)

SF-PRVO Vertical Flange Outdoor Dust & Water jet proof Motor

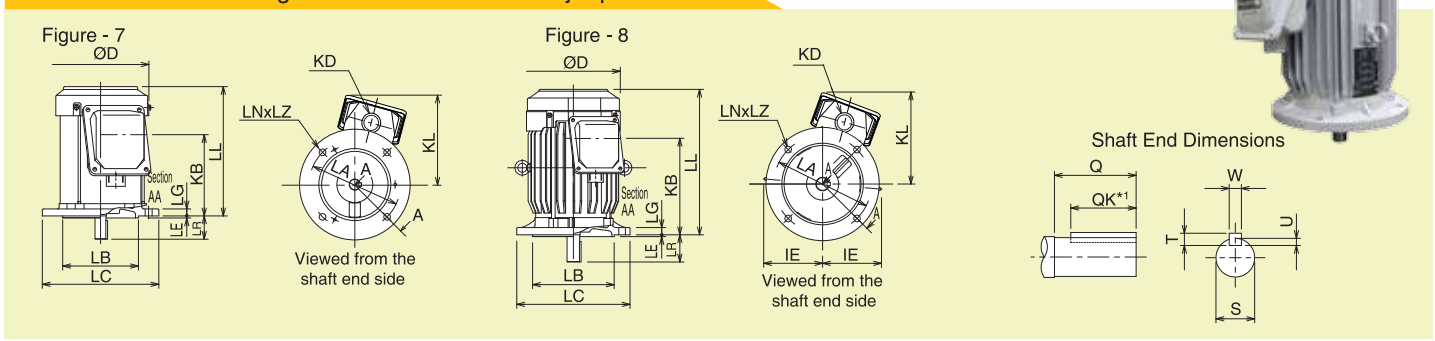

Outline dimensions

Flange Number	Frame Number	Thermal Class	Output (kW) Poles 2	Output (kW) Poles 4	Figure Number	Dimensions (mm) Motors D	IE	KB	KD	KL	LA	LB	LC	LE	LG	LL	LN	LZ
FF165	80M	120 (E)	0.75	0.75	7	166	—	139.5	PF 3/4	159	165	130j6	200	3.5	12	222	4	12
FF165	90L		1.5 , 2.2	1.5		202	—	198.5	PF 3/4	173	165	130j6	200	3.5	12	288.5	4	12
FF215	100L		—	2.2	8	207	130	213	PF 3/4	185	215	180j6	250	4	16	321	4	14.5

Flange Number	Frame Number	Dimensions (mm) Shaft End LR	Q	QK	S	T	U	W	Bearing Number Load Side	Anti-Load Side	Approximate Unloaded Mass (kg) 2 Poles	4 Poles
FF165	80M	40	40	32	19j6	6	3.5	6	6204ZZ	6204ZZ	15	16
FF165	90L	50	50	40	24j6	7	4	8	6205ZZ	6205ZZ	22 , 24	23
FF215	100L	60	60	45	28j6	7	4	8	6206ZZ	6205ZZ	—	33

*1 Since the key groove is machined with end mill, there is no roundness at the groove bottom.

- Since outline drawings are shown by representative models, some appearances may slightly differ depending on the frame number.
- Make sure to inquire when requiring exact external dimensions, since the external dimensions may be partially modified due to the refinement process, etc.
- Vertical flange model also can used by Horizontal installation.Please contact us again.

Standard Specifications

Item	Specifications (P-Series for Thailand)	
Enclosure Structure	Totally-enclosed Fan-cooled	
Product Model	SF-PR/SF-PRV *1	SF-PRO/SF-PRVO*1
Protection	IP44	IP55
Voltage and frequency	200V class : 200V 50Hz, 200V 60Hz*2 400V class : 380/400/415V 50Hz, 400V 60Hz	

Line up model

Model name	No. of leads		3 Leads				6 Leads	
	Thermal class		120(E)				130(B)	
	Voltage \ Output(kW)		0.75	1.5	2.2	3.7	5.5	7.5
SF-PR SF-PRV	200V class	2 Pole	●	●	●	*		
		4 Pole	●	●	●			
		6 Pole	*					
	400V class	2 Pole	●	●	●			
		4 Pole	●	●	●	●	●	●
		6 Pole	*				*	
SF-PRO SF-PRVO	200V class	2 Pole	●	●	●	*		
		4 Pole	●	●	●			
		6 Pole	*					
	400V class	2 Pole	●	●	●			
		4 Pole	●	●	●			
		6 Pole	*					

*under development

Note: Standard vertical type motor can be used for indoor flange type

Method of cooling		IC411
Rating		S1 (continuous)
Frame material		80M ~ 132M : Steel plate
Power transmission system		Direct-coupled, Belt driven
Direction of rotation		Counterclockwise (CCW) viewed from shaft end side.
Thermal class		80M ~ 112M 120(E), 132S ~ 132M 130(B)
Circumstance conditions	Ambient temperature	-30 ~ +40°C
	Ambient humidity	100% RH (no condensation)
	Altitude	1,000m above sea level or less
	Environment	No corrosive / explosive gas, no steam or condensation, minimal dust*3

Connection

3 Leads : 80 ~ 112Fr.

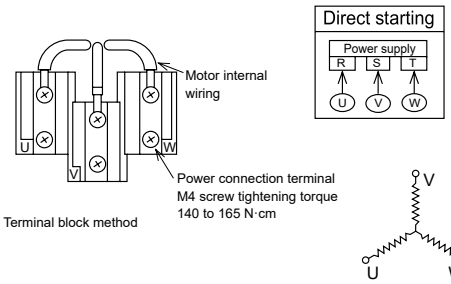

6 Leads : 132Fr.

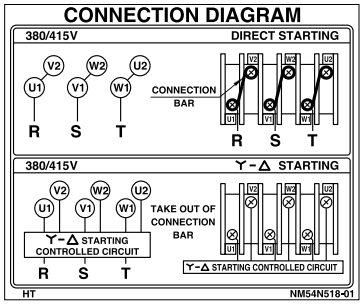

Coating color		Munsell N7 (Light Gray)
Conformed standard		80 ~ 100Fr. : IEC 60034-1, IEC 60034-30-1 *4, 112~ 132Fr. : JIS C 4213 & JEC 2100 : 2017
PSE Electrical safety law Japan		No apply

NOTE:
1. Vertical flange model also can be used by Horizontal installation.Please contact us.
2. Electric source for single phase ; can be operated running by using inverter.
   Electric source for three phase ; can adjust voltage to 200V 50Hz by using transformers.
3. Standard specifications use a varnish capable of using tropical atmospheres.
   However,coating changes and so on are required for tropicalization: designate separately.
4. 80 ~ 100Fr. will be changed conform standard to JIS C 4213 & JEC 2100 : 2017 in the futher.
5. For more detail of feature and construction can reference from catalog standard.
6. Mitsubishi Electric Automation (Thailand) Co.,Ltd. doesn't have responsible in case of motor exported by customer

REMARK: Also we have experience staff to give a consult and design special motor for any purpose.Please contact us.

MITSUBISHI ELECTRIC AUTOMATION (THAILAND) CO., LTD.